On the Control and Estimation over Relative Sensing Networks

Jasmine Sandhu, Mehran Mesbahi, and Takashi Tsukamaki

Abstract

In this note, we consider certain structural aspects of estimation and control over relative sensing networks. In this venue, using tools from basic algebraic graph theory- namely the incidence matrix and cut and cycle spaces of a connect graph- we examine transformations among relative sensing topologies for a networked system. These transformations are parameterized for noise-free as well as noisy networks and their utility in the context of network-centric robust control and control reconfigurations is explored.

Index Terms

Relative sensing networks, cut and cycle spaces of a graph, control and estimation over networks

I. Introduction

Networked dynamic systems are collections of dynamical units that interact over an information exchange network for their operation. These systems are ubiquitous in diverse areas of science and engineering; examples include physiological systems and gene networks [8], large scale energy systems, and multiple space, air, and land vehicles [1], [2], [16]. Currently, there is an active research effort underway in the systems community to formalize these systems and lay out a foundation for their analysis and synthesis [4], [5], [12], [17], [18]. The present work is motivated by examining how structural features of a particular class of information-exchange networks, namely, relative sensing networks, influence the system-theoretic properties of networked systems. Relative sensing networks are common in a wide variety of applications, including multi-agent coordination, clock synchronization, and sensor networks [3], [13], [14]. For example, multiple spacecraft formation flying over RSNs have recently been considered by Smith and Hadaegh [22]; this reference has in fact motivated our studies on RSNs in [20] and [21].

The system configuration of interest in this paper is shown in Fig. 1 where the signal z captures the coordination state among multiple dynamic systems; signals x, w, and u, denote respectively, the system state- comprised of states of the individual dynamic elements, the exogenous signal, and the control input. In this figure, the measured signal designated as 'RSN,' denotes the information vector (sensed or communicated over the network), that is available to the controller. Since the control objective is the coordination of relative states among dynamic units, it is assumed that $z(t)$ in Fig. 1 consists of components that are functions of vector differences $x_i(t) - x_j(t)$ ($i \neq j$).

This research was supported by a grant from Phantom Works, The Boeing Company, and NSF grant ECS-0501606.

Jasmine Sandhu is currently with Lincoln Laboratory, MIT, Cambridge, MA; Email: *jasminesandhu@yahoo.com*. Mehran Mesbahi is with the Department of Aeronautics & Astronautics at the University of Washington, Seattle, WA. Email: *mesbahi@aa.washington.edu*. Takashi Tsukamaki is with Boeing Phantom Works, Seattle, WA. Email: *takashi.tsukamaki@boeing.com.*

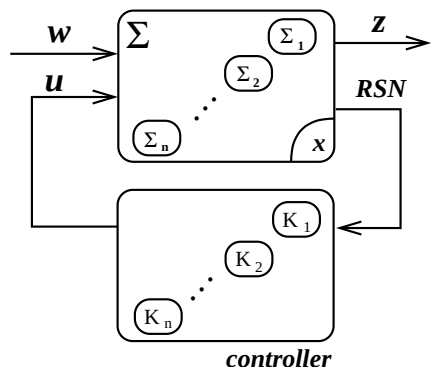

Fig. 1. The feedback configuration over an RSN

Likewise, the information available to the controller consists of a subset of these relative states. We refer to such a feedback system setup, and the resulting system-theoretic issues, as the problem of control and estimation over RSNs.

Our contribution in this paper to the general area of control and estimation over RSNs is as follows. First, we parameterize transformations that would allow mapping between structurally distinct RSNs. We then explore the utility of such parameterizations in the context of network-centric robustness analysis and a control reconfiguration mechanism when the underlying RSN undergoes structural changes. In §IV, we proceed to derive analogous transformations among RSNs with noisy links. Examples are incorporated throughout the paper to complement the theoretical analysis.

A. Notation and preliminaries

Our networked dynamic system consists of dynamic units with indices from the set $\{1, 2, \ldots, n\}$; this set will be denoted by $[n]$. We will write $|S|$ for the cardinality of set S; thus $|\,[n]\,| = n$. The matrix I_p denotes the $p \times p$ identity matrix; **1** is a vector with all entries equal to one with appropriate dimensions. The subspace spanned by the vector x will be denoted by **span** $\{x\}$; on the other hand, **Diag** $\{x\}$ is the diagonal matrix whose diagonal entries orderly correspond to the entries of x and $\mathbf{E}\{x\}$ denotes the expectation of a random variable x. The Kronecker product of two matrices A and B will be denoted by $A \otimes B$ [11]; $f \circ g$ refers to the the composition of two maps f and g. Lastly, $\mathcal{R}(A)$ and $\mathcal{N}(A)$ are, respectively, the range and the null spaces of the matrix A.

A graph $G = (V, E)$ consists of a vertex set $V(G)$ and an edge set $E(G)$, whose elements (i.e., edges) are two element subsets of $V(G)$ with distinct elements [6]. We view each element of $E(G)$ as connecting a pair of vertices- making them adjacent to each other. The graphs considered in this paper are simple- multiple edges connecting a pair of vertices and those starting and ending at the same vertex (i.e., self-loops) are not allowed. Directed version of the graphs, referred to as digraphs, will also be of interest to us: in this case each edge will be oriented with "tails" and "heads." We denote by $G_{j/i}$ the graph obtained by removing the edges of G_i from G_j when $V(G_i) \subseteq V(G_j)$ and $E(G_i) \subseteq E(G_j)$. We will also use subscripted vector notation, i.e., y_d, when the

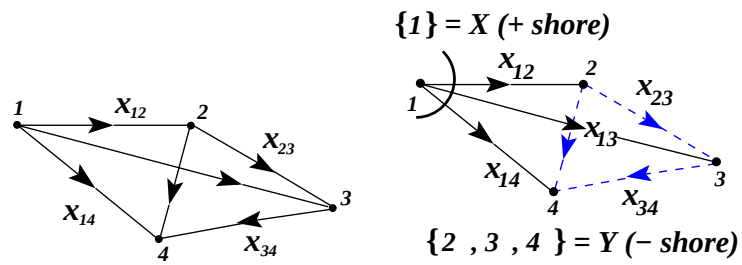

(a) (b)

Fig. 2. (a) An example of an RSN on four nodes, (b) A single vertex cut at v_1 in a four noded network

vector y is associated with a specific graph G_d. In a connected graph every vertex is reachable from every other vertex by moving along its edges- for the directed case- we will allow traversing an edge in both directions.[1] A minimally connected graph (or digraph) such that removing any edge results in a disconnected graph is called a tree. A spanning tree of G is a tree on $V(G)$ that contains $|V(G)|-1$ edges. Since a tree is minimally connected, it cannot contain a cycle- a subgraph where every vertex has exactly two adjacent vertices. In this paper, we use the terms "RSN," "information geometry," and "information graph" synonymously with simple, directed, and connected graphs; see Fig. 2(a).

For a digraph G, the incidence matrix defines the relation between a node and the edges incident to that node. The incidence matrix $D(G)$ is defined as a $|V(G)| \times |E(G)|$ matrix such that: $[D(G)]_{k\,l} = 1$ if v_k is the head of e_l, $[D(G)]_{k\,l} = -1$ if v_k is the tail of e_l, and $[D(G)]_{k\,l} = 0$ if edge e_l is not incident on vertex v_k . Thus for the digraph of Fig. 2(a),

$$D(G) = \begin{array}{c} \\ v_1 \\ v_2 \\ v_3 \\ v_4 \end{array} \begin{array}{c} \begin{array}{cccccc} e_{1,2} & e_{1,3} & e_{1,4} & e_{2,3} & e_{2,4} & e_{3,4} \end{array} \\ \begin{pmatrix} -1 & -1 & -1 & 0 & 0 & 0 \\ 1 & 0 & 0 & -1 & -1 & 0 \\ 0 & 1 & 0 & 1 & 0 & -1 \\ 0 & 0 & 1 & 0 & 1 & 1 \end{pmatrix} \end{array}. \tag{1}$$

Given the digraph G, consider a disjoint partition of $V(G)$ into two non-empty subsets X and Y. Refer to the set of edges with one end in X and the other in Y as a cut; X and Y are then called the shores of the cut. Next, assign one shore as the positive shore and the other as negative shore; the corresponding cut is now called an *oriented* cut. For each oriented cut one can define a vector $z \in \mathbf{R}^{|E_G|}$, referred to as its *signed characteristic vector*, where each component of the vector is defined as: $z_e = 0$ if the edge e is not in the cut, $z_e = 1$ if the head of e lies in the positive shore of the cut, and $z_e = -1$ if the head of e lies in the negative shore of the cut. Hence the signed characteristic vector for the cut shown in Fig. 2(b) is

$$z = [\, z_{e_{1,2}}, z_{e_{1,3}}, z_{e_{1,4}}, z_{e_{2,3}}, z_{e_{2,4}}, z_{e_{3,4}} \,]^T = [\, -1, -1, -1, 0, 0, 0 \,]^T.$$

[1]This corresponds to the weak connectivity for the digraph [6].

Consider the cut v_i associated with a vertex i such that the partition (X, Y) consists of the singleton vertex $i \in X$ on the positive shore and all other vertices in the digraph on the negative shore Y. Such a cut will be referred to as a single vertex cut in the digraph. The characteristic signed vector associated with the single vertex cut at v_i is now precisely the i-th row of the incidence matrix $D(G)$. As we move from one vertex to the next- and in fact skip one vertex along the way- and consider the corresponding single vertex cuts, we obtain a natural basis for a linear subspace associate with the graph, namely its cut space $\mathcal{T}(G)$. In fact, the cut space is characterized by $\mathcal{R}(D(G)^T)$. In general, the cut space $\mathcal{T}(G)$ for a graph G on n vertices having c connected components has dimension $n-c$ [10]. Analogously, one can define the subspace orthogonal to $\mathcal{T}(G)$ as the cycle space $\mathcal{C}(G)$. The basis vectors for this subspace can graphically be constructed from the cycles of the digraph as follows: define an *oriented cycle* as a cycle with a particular direction in G; then construct a *signed characteristic vector* $w \in \mathbf{R}^{|E_G|}$ associated with this cycle such that each component of w is an element of $\{-1, 0, 1\}$, depending on the orientation of the edge with respect to the chosen cyclic direction. From the fundamental theorem of linear algebra [6], [23], it now follows that

$$\mathcal{T}(G) := \mathcal{R}(D(G)^T),\ \mathcal{C}(G) := \mathcal{N}(D(G)),\ \mathcal{T}(G)^{\perp} = \mathcal{C}(G),\ \mathcal{C}(G)^{\perp} = \mathcal{T}(G),\ \text{ and }\ \mathcal{C}(G) \oplus \mathcal{T}(G) = \mathbf{R}^{|E_G|}. \quad (2)$$

For a connected graph on n vertices the dimension of $\mathcal{C}(G)$ is $|E(G)| - (n-1)$.

II. Problem setup

We consider distributed dynamic systems of the form

$$\Sigma: \quad \dot{x}(t) = f(x(t), u(t), w(t)) \quad (3)$$

$$y(t) = Cx(t) + w(t) \quad (4)$$

$$z(t) = h(x(t), u(t), w(t)), \quad (5)$$

where $x = [\,x_1^T, x_2^T, \ldots, x_n^T\,]^T$ represents the state of the system with $x_i \in \mathbf{R}^p$ ($p \geq 1$), $u = [\,u_1^T, u_2^T, \ldots, u_n^T\,]^T$ denotes the control input with each u_i of appropriate dimensions, and the vector y in (4) is the information vector available to the controller over an RSN; see Fig. 1 and the related paragraph on the feedback setup in §I. The noise-free $y(t)$ in (4) (when $w = 0$) is assumed to have components of the form

$$x_{ij}(t) := x_j(t) - x_i(t),$$

for a pair of distinct indices $i, j \in [n]$. This information geometry can naturally be represented in terms of a directed graph G. For example Fig. 2(a) corresponds to the situation where

$$y(t) = [\,x_{12}(t)^T\, x_{13}(t)^T\, x_{14}(t)^T\, x_{23}(t)^T\, x_{24}(t)^T\, x_{34}(t)^T\,]^T$$

$$y_G(t) = (D(G)^T \otimes I_p)\, x(t),$$

with G being the underlying information digraph available to each node of the networked system Σ. In order to simplify the notation, we will use $D(G)$ to denote both the incidence matrix as well as its inflated version $D(G) \otimes I_p$.

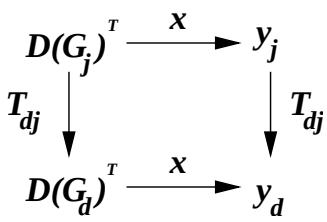

Fig. 3. Transforming between two RSN-induced measurements

Consider next, the linear feedback control law for the node i, with access to a particular RSN represented by the directed graph G_d; that is,

$$u_i(t) = K_i(G_d)\, y_d(t).$$

The subscript notation for the measurement vector $y_d(t)$ signifies the fact that this vector is associated with the RSN G_d. Suppose now that the actual relative states available to the controller at some t is specified by

$$y_j(t) := D(G_j)^T\, x(t).$$

Hence, it becomes imperative to seek a (linear) transformation T_{dj} such that for all t, $y_d(t) = T_{dj}\, y_j(t)$. This on the other hand, implies that for all t,

$$D(G_d)^T x(t) = T_{dj}\, D(G_j)^T x(t),$$

and consequently, the desired transformation T_{dj} satisfies the matrix equation

$$T_{dj}\, D(G_j)^T = D(G_d)^T \tag{6}$$

which is independent of the specific system state x and dependent only on the RSNs G_j and G_d; see Fig. 3. We refer the transformations between two distinct RSNs satisfying (6) collectively as T-transformations.

III. T-TRANSFORMATIONS FOR NOISE-FREE RSNS

In this section, we proceed to parameterize T-transformations among RSNs on the same node set. The crucial observation in deriving such parameterizations pertains to the role of algebraic redundancies in the corresponding RSNs. For example, when directed edges represent relative states, the algebraic redundancies are represented by the cycles in the digraph. Hence, when $y(t) = D(G)^T x(t)$ for some t, with $D(G)$ corresponding to a digraph with cycles, the characteristic signed vector associated with each cycle C_i satisfies

$$C_i^T y(t) = 0,$$

revealing the algebraic redundancies in the observation $y(t)$. As an illustration of how these redundancies are utilized in the context of T-transformations, consider Figure 4, where the objective is to construct the RSN G_d given the RSN G_j. We note that completing the appropriate cycles in G_j results in the RSN G_d. Thereby the T-transformation

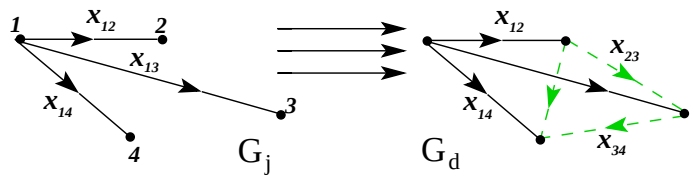

Fig. 4. Measure a spanning tree y_j and then constructing the remaining edges in the cycles of G_d.

between two networks G_j and G_d is intimately related to the cycle structures of the corresponding RSNs.

Our discussion on transformations that facilitate mapping among distinct connected information geometries revolve around three canonical cases. These cases include transformations (1) from an RSN to one of its subgraphs, (2) from an RSN that is a spanning tree to any other RSN, and (3) between two arbitrary connected RSNs.

Case 1 (transformation between an arbitrary RSN to one of its subgraphs): First consider the scenario where the desired RSN G_d is a subgraph of the information network G_j. Given that G_d and G_j have m_d and m_j edges, respectively, the transformation T_{dj} satisfying $D(G_d)^T = T_{dj} D(G_j)^T$ is an $m_d \times m_j$ matrix. Consider next the decomposition

$$T_{dj} = [\, \widehat{T}_{dj} \;\; \widetilde{T}_{dj} \,] \in \mathbf{R}^{m_d \times m_j}, \tag{7}$$

where $\widehat{T}_{dj} \in \mathbf{R}^{m_d \times m_d}$ and $\widetilde{T}_{dj} \in \mathbf{R}^{m_d \times m_j - m_d}$, and the corresponding rearranging of the incidence matrix $D(G_j)$ as

$$D(G_j) = [\, D(G_d) \;\; D(G_{j/d}) \,];$$

hence

$$\widehat{T}_{dj} = I \quad \text{and} \quad \widetilde{T}_{dj}\, D(G_{j/d})^T = 0.$$

The trivial solution for $\widetilde{T}_{dj}$ is the zero matrix while the general matrix solution consists of rows that belong to the cycle space $\mathcal{C}(G_{j/d})$; see (2).

Case 2 (transformation between a spanning tree and an arbitrary RSN): The second canonical case corresponds to the transformation T_{dj} where G_j is a spanning tree and the target digraph G_d represents an arbitrary RSN; see Figure 4. In this case, one can state the following result.

Proposition 3.1: Let G_j be a spanning tree RSN and G_d represent an arbitrary RSN. Then

$$T_{dj} = D(G_d)^T D(G_j)\, [\, D(G_j)^T\, D(G_j) \,]^{-1}, \tag{8}$$

where $D(G_j)$ and $D(G_d)$ represent, respectively, the incidence matrices associated with RSNs G_j and G_d.[2]

[2]The identity (8) hints to the fact that the transformation T_{jd} can be viewed as the projection of the network G_d along the edge space of the RSN G_j [6].

Proof: From the matrix equation (6) it follows that $D(G_j)\,T_{dj}^T = D(G_d)$ and hence

$$\{D(G_j)^T D(G_j)\}\,T_{dj}^T = D(G_j)^T D(G_d).$$

Since the **rank** $D(G_j) = n-1$, the matrix product $D(G_j)^T D(G_j)$ is invertible and (8) follows. ■

Case 3 (transformation between two arbitrary connected RSNs): There are at least two approaches to characterize a T-transformation between two arbitrary connected RSNs G_d and G_j: (1) transform the given digraph G_j to a spanning tree subgraph G_k (which corresponds to a Case 1 scenario above), followed by the transformation from G_k to the RSN G_d given in Proposition 3.1 and letting $T_{dj} = T_{dk} \circ T_{kj}$, (2) Complete the cycles of G_j to obtain a complete digraph G_c then choose an appropriate subgraph of G_c (re-orient edges if necessary) that corresponds to G_d; then letting $T_{dj} = T_{dc} \circ T_{cj}$. An explicit formula for the T-transformation T_{dj} between two arbitrary connected RSNs, easily implemented numerically is facilitated by the following result.

Lemma 3.2: The collection of $n-1$ rows of the incidence matrix for a connected digraph, corresponding to its $n-1$ signed characteristic vectors of single vertex cuts, are linearly independent.

Proof: Let $D(G)$ be the incidence matrix associated with the RSN G. As G is connected, the one dimensional null space of $D(G)^T$ is spanned by the vector $\mathbf{1}$ [10]. Hence **rank** $D(G) =$ **rank** $D(G)^T = n-1$. ■

Proposition 3.3: Let G_j and G_d represent two arbitrary connected RSNs. Then

$$T_{dj} = \widehat{D}(G_d)^T\,\{\widehat{D}(G_j)\widehat{D}(G_j)^T\}^{-1}\widehat{D}(G_j) \tag{9}$$

where the rows of $\widehat{D}(G_j)$ and $\widehat{D}(G_d)$ correspond, respectively, to the $n-1$ signed characteristic vectors of single vertex cuts of RSNs G_j and G_d.

Proof: The proof follows from the observation that

$$T_{dj}D(G_j)^T = D(G_j)^T \quad \text{if and only if} \quad T_{dj}\widehat{D}(G_j)^T = \widehat{D}(G_j)^T;$$

moreover, the matrix $\widehat{D}(G_j)$ is full row-rank. ■

Next, let us explore the utility of T-transformations among RSNs in the context of a network-centric robustness analysis and a control reconfiguration mechanism for uncertain networked system with dynamic structural interconnections.

A. Controller Reconfiguration via T-transformations

Consider the situation where the controller in Figure 1 is a linear function of the observation vector, i.e.,

$$u(t) = K(G_d)\,y_d(t),$$

where $y_d(t) = D(G_d)^T x(t)$ and $K(G_d)$ has been designed specifically for the connected RSN G_d in order to satisfy a given stability and performance criteria for the closed loop system. Now consider the situation where the RSN available to the controller is changed to the connected RSN G_j, i.e.,

$$y_d(t) \rightsquigarrow y_j(t) = D(G_j)^T x(t).$$

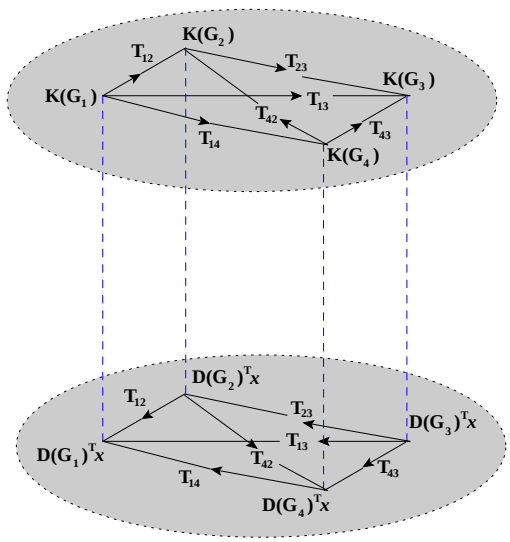

Fig. 5. T-transformation in action: T_{dj} can be viewed a transformation that enables a control reconfiguration mechanism when the underlying RSN changes from G_d to G_j.

In order to keep the control signal input to the networked system unchanged in face of such a structural change in the underlying RSN, we can use appropriate T-transformation

$$y_d(t) = T_{dj}\, y_j(t)$$

and obtain

$$u(t) = K(G_d)\, T_{dj}\, y_j(t).$$

Hence by updating the controller as $K(G_j) := K(G_d) \circ T_{dj}$, the control input to the system remains unchanged even as the RSN G_d changes to the RSN G_j. Considering T_{dj} as a *left transformation* on the controller $K(G_d)$, it can be viewed as a controller reconfiguration mechanism, ensuring the compatibility of the control law with the geometry of the underlying information network; see Figure 5.

B. Robustness analysis for uncertain RSNs

The parameterization of T-transformations also allows for a network-centric robustness analysis for dynamic systems that operate over RSNs. In this direction, consider the scenario where a stabilizing controller has been designed for a networked system, assuming the availability of the RSN G_1 in Fig. 6(a), whereas each node has in fact an available information geometry represented by RSN G_3. Furthermore, assume that the control objective is to steer the error between the desired and actual states of the RSN G_1 to the origin. Let us also consider the case where each node has a double integrator dynamics and the relative state information available to the controller is

$$\begin{bmatrix} z_1(t) \\ \dot{z}_1(t) \end{bmatrix} := \begin{bmatrix} D(G_1)^T x(t) \\ D(G_1)^T \dot{x}(t) \end{bmatrix}.$$

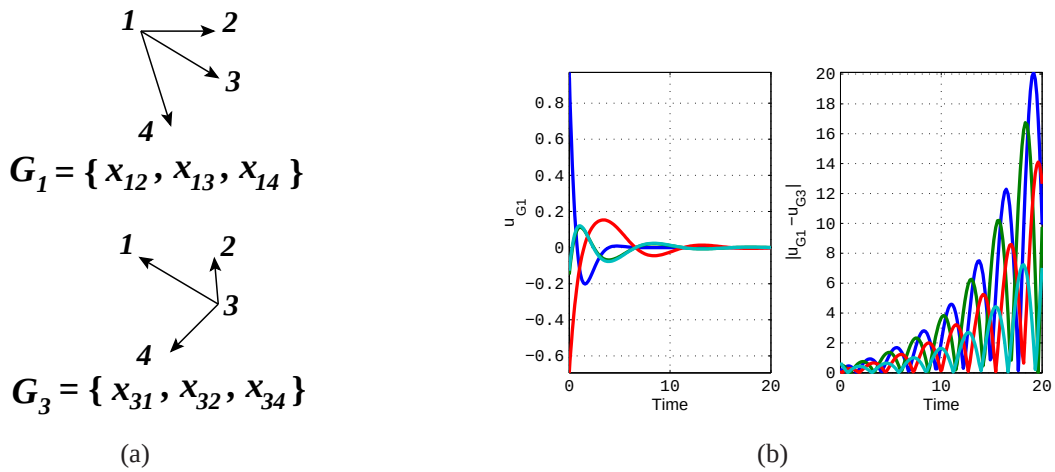

(a) (b)

Fig. 6. (a) Robustness analysis for the feedback control law designed for RSN G_1 when the actual RSN is G_3, (b) Nominal control operating on RSN G_1 (left plot), and the difference between the resulting control inputs as the controller operates on RSN G_1 and RSN G_3 (right plot).

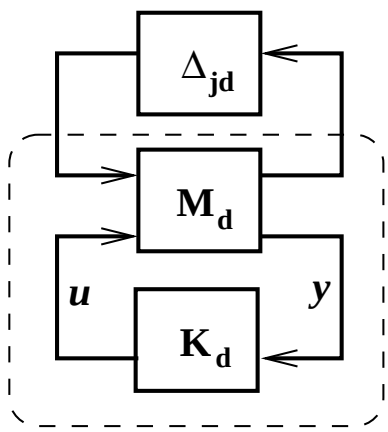

Fig. 7. Controller robustness for uncertain sensing geometries via small gain theorem.

The transformation of interest $T_{13} : G_3 \to G_1$ can now be viewed as a measure of discrepancy between "expected" and available RSNs. In the case when this transformation is not applied, however, the feedback configuration can become unstable; see Fig. 6(b). The robustness of the designed control mechanism with respect to variations in the underlying RSN can be addressed in the robust control framework [7], [19]. For this purpose, assume that the allowable variation of the underlying RSN is among the class of digraphs consisting of spanning trees, $\mathcal{G}_T$. Denote by $K_d(s)$ the stabilizing linear control law designed for the nominal information network $G_d \in \mathcal{G}_\mathcal{T}$ for the system of relative states and

$$\dot{z}_d(t) = Az_d(t) + Bu(t) \quad \text{and} \quad y(t) = z_d(t),$$

where $z_d(t) := D(G_d)^T x(t)$. Let the transfer matrix $P_d(s)$ denote the corresponding input-output transfer matrix from the input u to the output y. Furthermore assume that $G_j \in \mathcal{G}_\mathcal{T}$ is an *uncertain* RSN available to each node

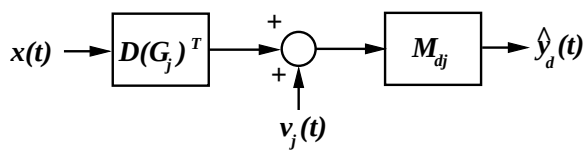

Fig. 8. Optimal (static) state estimation over networks

in the system. Setting

$$\Delta_{jd} = T_{jd} - I \quad \text{with} \quad D(G_j)^T = T_{jd}\, D(G_d)^T, \tag{10}$$

we realize that the transfer matrix from u to y for this uncertain system is in fact $T_{jd}\, P_d(s)$. Within such a framework, the following result is now a direct consequence of the small gain theorem [7].

Theorem 3.4: The linear control law $K_d(s)$ robustly stabilizes the system of relative states for an uncertain RSN G_j if

$$\|\Delta_{jd}\| < 1/\|\underline{S}(M_d, K_d)\| \quad \text{where} \quad M_d(s) := \begin{bmatrix} 0 & P_d(s) \\ I & P_d(s) \end{bmatrix},$$

Δ_{jd} defined by (10) captures the deviation of the uncertain RSN from the nominal RSN G_d, $\underline{S}(M_d, K_d)$ denotes the lower linear fractional transformation of $M_d(s)$ and $K_d(s)$, and the norm for a transfer matrix is its maximum singular value across all frequencies (i.e., its H_∞-norm); see Figure 6(c).

IV. RSN TRANSFORMATIONS FOR NOISY NETWORKS

We now consider the scenario where a controller has been designed for the feedback system whose information geometry is specified by the spanning tree G_d, i.e.,

$$y_d(t) = D(G_d)^T x(t) \tag{11}$$

in Fig. 1. Suppose that the information geometry for one of the nodes, however, is

$$\widetilde{y}_j(t) = D(G_j)^T\, x(t) + v_j(t), \tag{12}$$

where v_j is the noise on the corresponding edges of the network. In this section, we consider the problem of finding the appropriate transformation that, when applied to $\widetilde{y}_j(t)$ (12), results in the minimum variance estimate for the measurement specified by the RSN G_d. We will denote the corresponding estimate by $\widehat{y}_d(t)$; see Fig. 8. For this purpose, a zero mean measurement noise with measurement covariance σ_{ik}^2 for each relative state measurement x_{ik} is assumed. Let the covariance matrix for a digraph that has all possible directed edges among the nodes be

$$R = \mathbf{Diag}\,([\,\sigma_{12}^2\ \sigma_{13}^2\ \ldots\ \sigma_{(n-1)n}^2\,]^T).$$

The noise covariance on the digraph G_j on the other hand will be denoted by R_j with diagonal entries that coincide, in an orderly way, with the diagonal entries of R for each measured edge of G_j. Our objective is now finding the

transformation

$$M_{dj} : \widetilde{y}_j(t) \to \widehat{y}_d(t)$$

such that at time t the mean value of the error,

$$\frac{1}{2} \sum_i \mathbf{E}\,[\, e_i^2(t)\,] := \frac{1}{2} \sum_i \mathbf{E}\,[\,(\widehat{y}_d(t) - y_d)_i^2\,],$$

is minimized; we refer to such transformations collectively as M-transformations. Since

$$\widetilde{y}_j(t) = y_j(t) + v_j(t) = T_{jd}\, y_d(t) + v_j(t),$$

in the absence of noise one has

$$\widetilde{y}_j(t) = T_{jd}\, y_d(t) = y_j(t), \quad \widehat{y}_d(t) = y_d(t), \quad \text{and} \quad y_d(t) = M_{dj}\, y_j(t) = M_{dj}\, T_{jd}\, y_d(t);$$

thus $M_{dj}\, T_{jd} = I$, where T_{jd} denotes the T-transformation between the RSNs G_d and G_j. As for each index i the error vector is

$$e_i(t) = (\widehat{y}_d(t) - y_d(t))_i = \{M_{dj}\,(y_j(t) + v_j(t)) - y_d(t)\}_i,$$

the problem of minimizing the error covariance for the estimated relative states associated with G_d can be written as

$$\min_{M_{dj}} \quad \frac{1}{2}\,\textbf{Trace}\; M_{dj}\, R_j\, M_{dj}^T \tag{13}$$

subject to the equality constraint $M_{dj} T_{jd} = I$. The optimal transformation solving (13) is thereby given by

$$M_{dj} = (T_{jd}^T\, R_j^{-1}\, T_{jd})^{-1}\, T_{jd}^T\, R_j^{-1}.$$

Viewing the minimum variance transformation from yet another perspective, we note that for the perfect measurement case, one has

$$\widetilde{y}_j(t) = y_j(t),$$

and hence

$$\widehat{y}_d(t) = y_d(t) = M_{dj}\, y_j(t).$$

Thereby,

$$y_d(t) = M_{dj}\, y_j(t) \quad \text{and} \quad \widehat{D}(G_d)^T = M_{dj}\, \widehat{D}(G_j)^T,$$

where the rows of $\widehat{D}(G_j)$ and $\widehat{D}(G_d)$ correspond, respectively, to the $n-1$ signed characteristic vectors of the single vertex cuts of RSNs G_j and G_d. Consequently, the optimization problem (13) can also be represented by

$$\min_{M_{dj}} \quad \frac{1}{2}\,\textbf{Trace}\; M_{dj}\, R_j\, M_{dj}^T \tag{14}$$

subject to the equality constraint $\widehat{D}(G_d)^T = M_{dj}\, \widehat{D}(G_j)^T$. The solution to the above equality constrained optimization problem is now given by

$$M_{dj} = \widehat{D}(G_d)^T \left[\widehat{D}(G_j) R_j^{-1} \widehat{D}(G_j)^T\right]^{-1} \widehat{D}(G_j) R_j^{-1}. \tag{15}$$

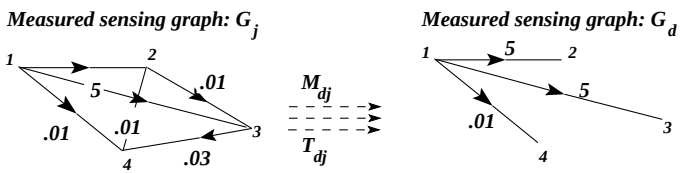

Fig. 9. Transformation between RSNs G_j and G_d in presence of noise.

Note that when variances on all edges are equal, i.e., $R = \rho I$ for some $\rho > 0$, the transformation (15) reduces to the T-transformation T_{dj} given in (9). Moreover, for the case when the information geometry is a spanning tree the resulting transformation is again $M_{dj} = T_{dj}$. In other words, when the given information graph is minimally connected, the corresponding M-transformation becomes independent of the noise variances on the edges.

Example: Consider a 4-node network of damped harmonic oscillators with identical dynamics

$$\ddot{\theta}_i(t) = -\omega_n^2 \theta_i(t) - 2\zeta\omega_n \dot{\theta}_i(t)$$

with $\zeta = \sqrt{2}/2$ and $\omega_n = 1$. The desired and measured RSNs are shown in Fig. 9 where variances have been labeled on the edges. Simulation results that compare the estimate $\widehat{y}_d(t)$ corresponding to the optimal transformation M_{dj} to the estimate obtained by applying the T-transformation T_{dj} (9) is shown in Fig. 10. The estimated edges correspond to the relative angle measurements θ_{ij}. The initial conditions are set to be zero; thus the state y_d marked by '*' remain at zero throughout the simulation. We note that the error in the estimates using the M-transformation M_{dj} marked by '+' have a much tighter 3σ bound than the error obtained by using the estimates provided by the corresponding T-transformation (marked as 'o' in Fig. 10).

V. Conclusion

In this work, we derived formulas for transformations between noise-less and noisy relative sensing networks. The utility of such characterizations in the context of a control reconfiguration strategy and robustness analysis for networked systems is then explored. Future work in this area includes refining the notion of structural uncertainty for networks in the context of robust control and considering adaptive/reconfigurable filters for networked systems that operate over dynamic RSNs.

Acknowledgments

The authors would like to thank the reviewers for their helpful comments and suggestions.

REFERENCES

[1] T. Balch and R. C. Arkin. Behavior-based formation control for multi-robot teams, *IEEE Transactions on Robotics and Automation*, 14: 926-939, 1998.

[2] B. Bamieh, F. Paganini, and M. Dahleh. Distributed control of spatially-invariant systems, *IEEE Transactions on Automatic Control*, 47 (7): 1091-1107, July 2002.

[3] P. Barooah and J. P. Hespanha. Estimation on graphs from relative measurements: distributed algorithms and fundamental limits. *IEEE Control Systems Magazine*, (27) 4: 57-74, 2007.

[4] J. Cortés and F. Bullo. Coordination and geometric optimization via distributed dynamical systems, *SIAM Journal on Control and Optimization*, (45) 5: 1543-1574, 2005.

[5] R. D'Andrea and G. E. Dullerud. Distributed control design for spatially interconnected systems, *IEEE Transactions on Automatic Control*, (48) 9: 1478-1495, 2003.

[6] R. Diestel. *Graph Theory*, Springer, 2000.

[7] G. Dullerud and F. Paganini. *A Course in Robust Control Theory*, Springer, 2000.

[8] C. Fall, E. Marland, J. Wagner, and J. Tyson (Editors). *Computational Cell Biology*, Springer, 2005.

[9] A. Fax and R. M. Murray. Information flow and cooperative control of vehicle formations, *IEEE Transactions on Automatic Control*, (49) 9: 1465- 1476, 2004.

[10] C. Godsil and G. Royle. *Algebraic Graph Theory*, Springer, 2001.

[11] R. A. Horn and C. R. Johnson. *Topics in Matrix Analysis*, Cambridge, 1991.

[12] A. Jadbabaie, J. Lin and A. S. Morse. Coordination of groups of mobile autonomous agents using nearest neighbor rules, *IEEE Transactions on Automatic Control*, (48) 6: 988–1001, 2003.

[13] R. Karp, J. Elson, D. Estrin, and S. Shenker. Optimal and global time synchronization in sensornets, CENS Technical Report No. 0012, Center for Embedded Networked Sensing, University of California, Los Angeles, April 2003.

[14] Q. Li and D. Rus. Global clock synchronization in sensor networks, *IEEE Transactions on Computers*, (55) 2: 214-226, 2006.

[15] Z. Lin, M. Broucke, and B. Francis. Local control strategies for groups of mobile autonomous agents, *IEEE Transactions on Automatic Control*, (49) 4: 622–629, 2004.

[16] M. Mesbahi and F. Y. Hadaegh. Formation flying control of multiple spacecraft via graphs, matrix inequalities, and switching, *AIAA Journal of Guidance, Control, and Dynamics*, (24) 2: 369–377, 2001.

[17] M. Mesbahi. State-dependent graphs and their controllability properties, *IEEE Transactions on Automatic Control*, (50) 3: 387 - 392, 2005.

[18] R. Olfati-Saber, J. A. Fax, and R. M. Murray. Consensus and cooperation in networked multi-agent systems, *Proceedings of the IEEE*, (95) 1: 215-233, 2007.

[19] R. S. Sánchez-Peña and M. Sznaier. *Robust Systems Theory and Applications*, Wiley, 1998.

[20] J. Sandhu, M. Mesbahi, and T. Tsukamaki. "Cuts and flows of relative sensing and control of spatially distributed systems," *American Control Conference*, pp. 73-99, June 2005.

[21] J. Sandhu, M. Mesbahi, and T. Tsukamaki. "Relative sensing networks: observability, estimation, and the control structure," *IEEE Conference on Decision and Control*, pp. 6400-6405, December 2005.

[22] R. S. Smith and F. Y. Hadaegh. Control of deep-space formation-flying spacecraft: relative sensing and switched information, *AIAA Journal of Guidance, Control, and Dynamics*, (28) 1: 106-114, 2005.

[23] F. Zhang. *Matrix Theory*, Springer, 1999.

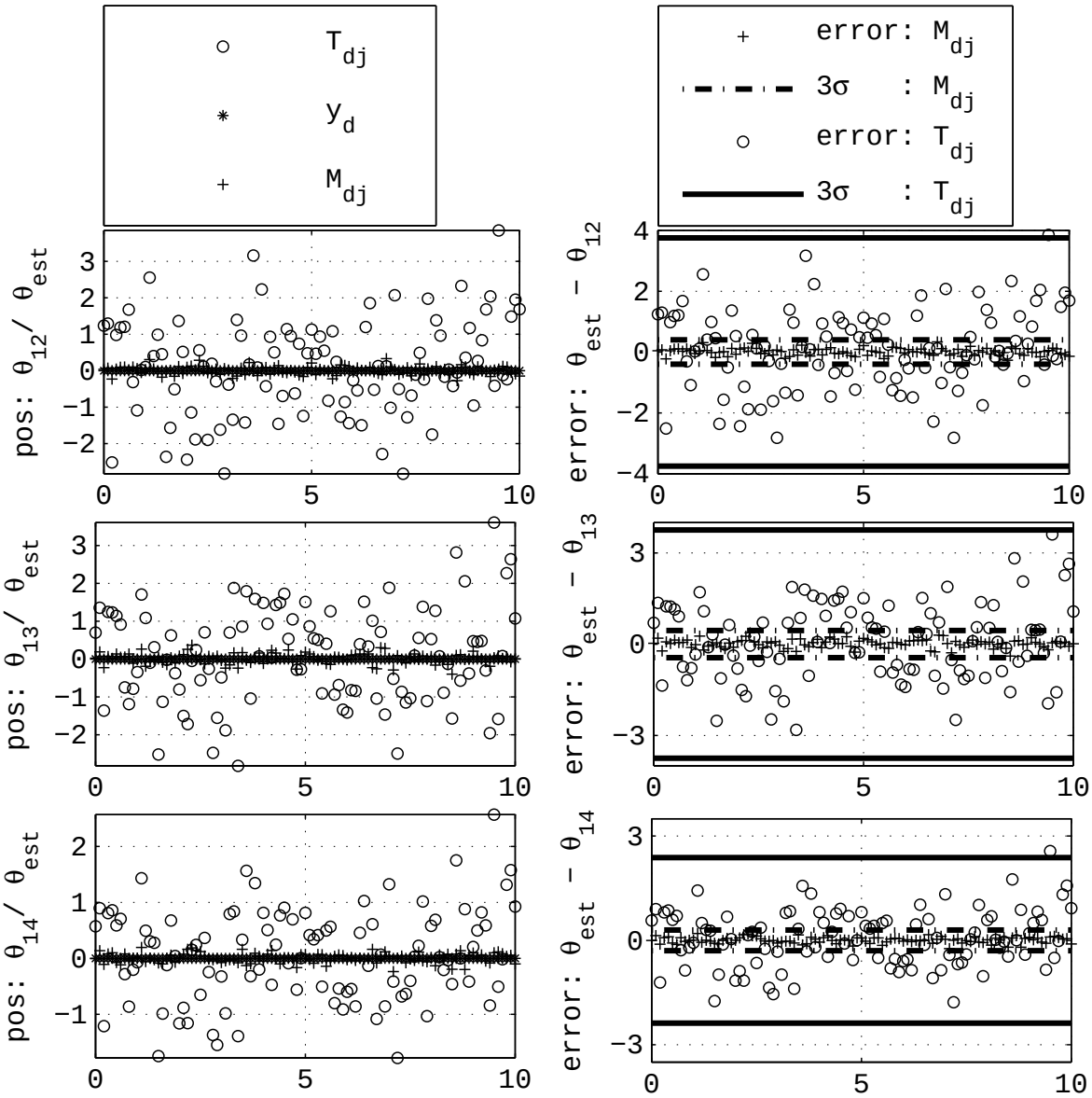

Fig. 10. The estimate $\widehat{y}_d(t)$ under M_{dj} and T_{dj} transformations.